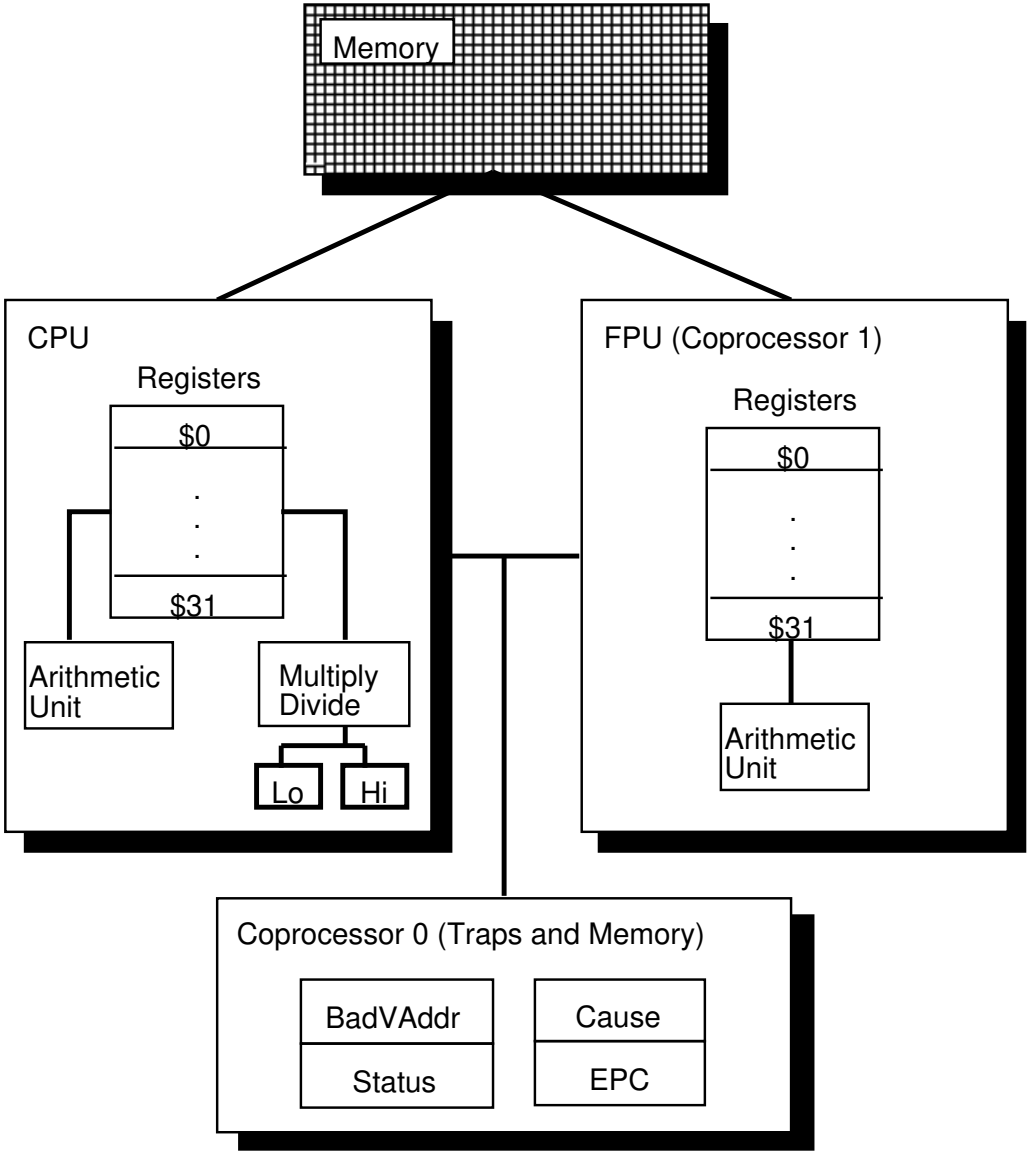
Memory
CPU
Registers
$0
$31
Arithmetic Unit
Multiply Divide
Lo
Hi
FPU (Coprocessor 1)
Registers
$0
$31
Arithmetic Unit
Coprocessor 0 (Traps and Memory)
BadVAddr
Status
Cause
EPC