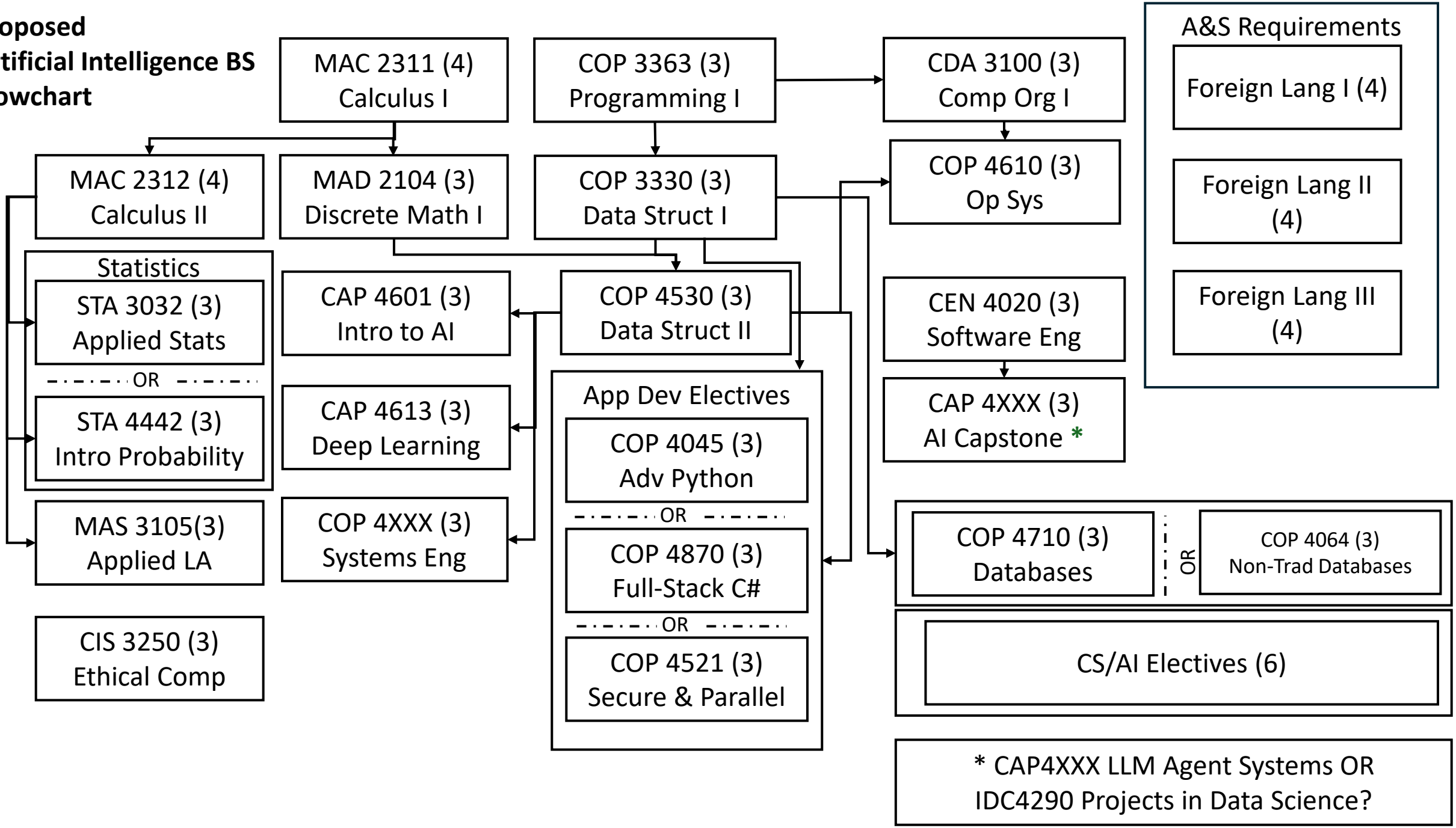Proposed Artificial Intelligence BS Flowchart