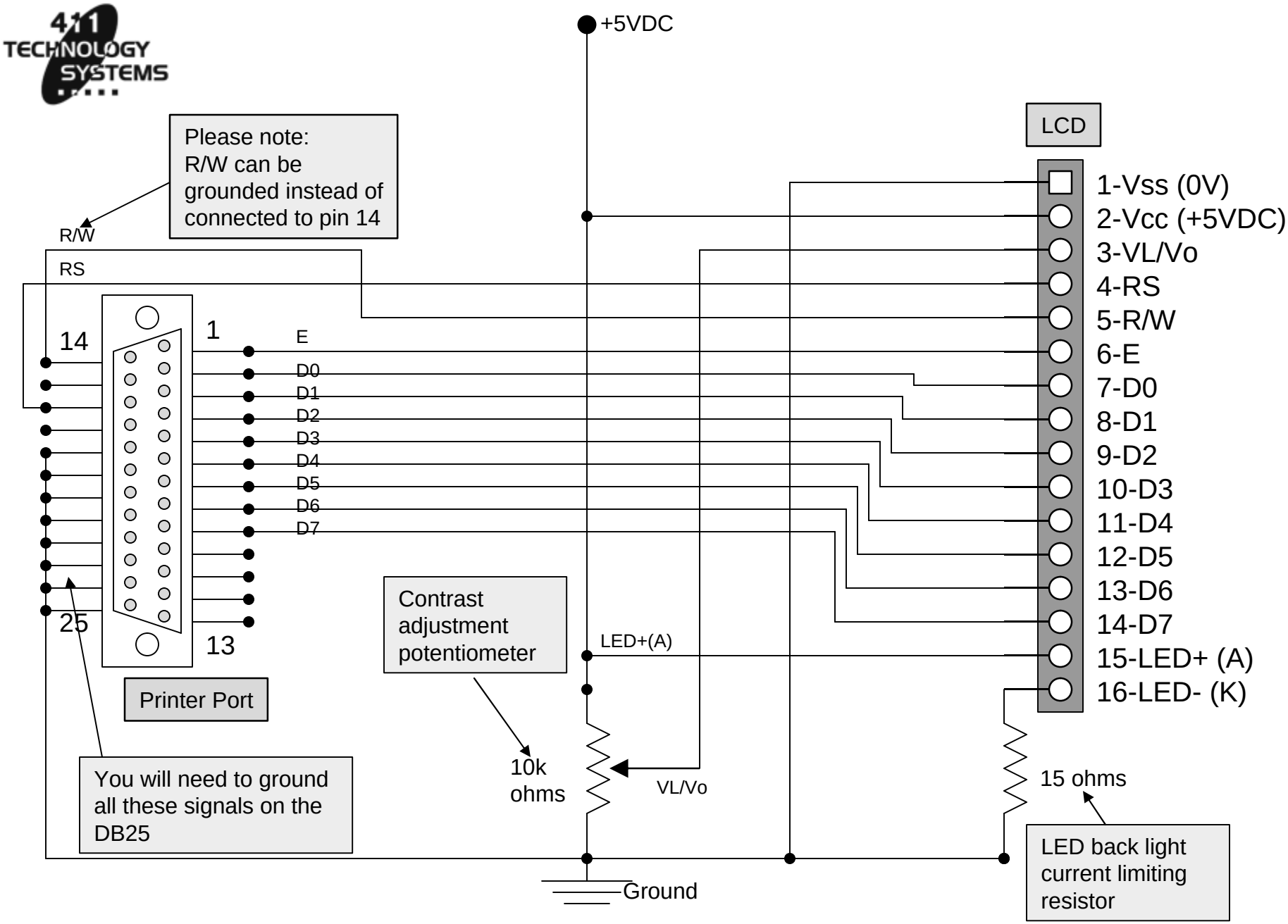


©2005, 2006 411 Technology Systems

# Software control of back light

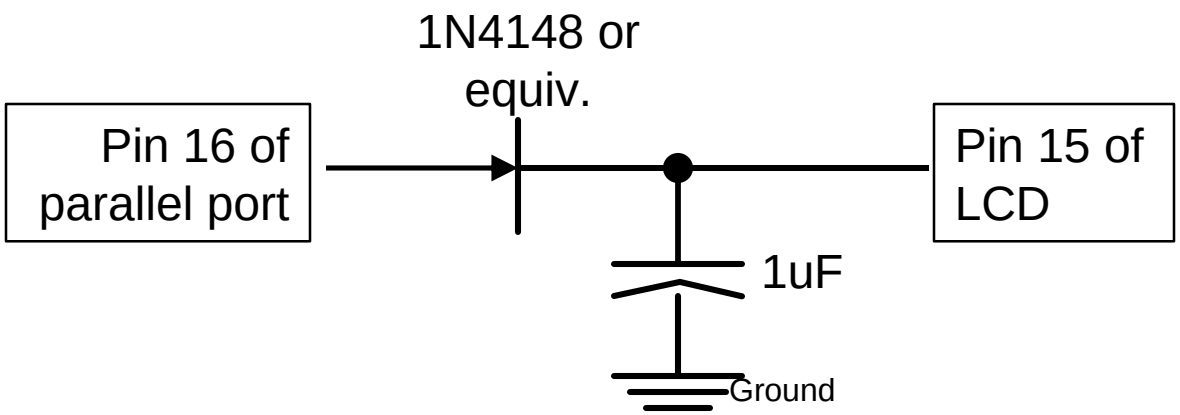


©2005, 2006 411 Technology Systems